S51-MA/MR SERIES

INSTRUCTION MANUAL

CONTROLS

OUTPUT LED (S51-…A00/B01/C01/C10/C20/F00)
The yellow LED ON indicates that the NO output status is closed.

POWER ON LED (S51-…G00)
The green LED indicates that the sensor is operating.

TRIMMER (S51-…B01/C01)
The trimmer can be used to adjust sensitivity; the operating distance increases turning the trimmer clockwise.

WARNING: *The trimmer rotation is limited to 270°.*
Do not apply excessive torque beyond the maximum and minimum positions (max 40 Nmm).

INSTALLATION

The sensor can be fixed by means of the M18x1 threaded body through a ∅ 18 mm hole, using the two CH.24 nuts enclosed (22 Nm maximum tightening torque).

Various orientable fixing brackets are available to ease the sensor positioning (please refer to the accessories listed in the general catalogue).
The operating distance is measured from the front surface of the sensor lens.
C models: To improve the detection, the object has to be moved closer or further away from the front surface of the sensor lens.

In case of lateral translation, the object must move as indicated in the figure.

CONNECTIONS

The connections are compliant to the EN 60947-5-2 standard.

S51-…A00/B01/C01/C10/C20/F00

BROWN	1	+ 10 … 30 Vdc
WHITE	2	DARK- / LIGHT+ *
BLACK	4	N.O. OUTPUT
BLUE	3	– 0 V

S51-…G00

BROWN	1	+ 10 … 30 Vdc
WHITE	2	TEST +
BLACK	4	TEST -
BLUE	3	– 0 V

* in case of white wire or pin 2 not connected the sensor works in LIGHT mode for proximity models (C01/C10/C20) and in DARK mode for retroreflex (A00/B01) and receiver (F00).

M12 CONNECTOR

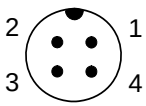

DIMENSIONS

AXIAL VERSION

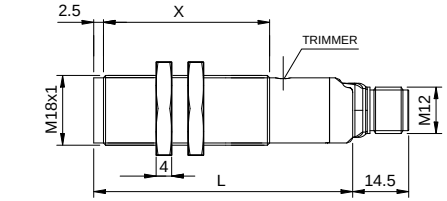

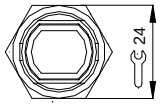

	MODELS	
	B01/C01/F00	A00/C10/G00
L	67	57
X	43	38

RADIAL VERSION

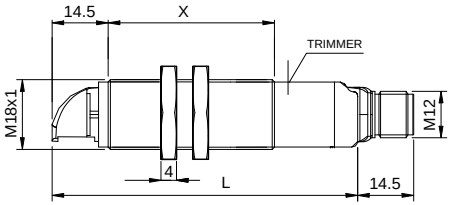

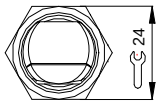

	MODELS	
	B01/C01/F00	A00/C10/G00
L	79	69
X	43	38

mm

CABLE VERSION

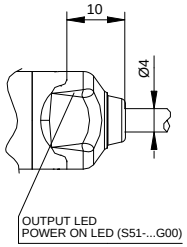

TECHNICAL DATA

	S51-MA AXIAL VERSION	S51-MR RADIAL VERSION
Power supply:	10 … 30 Vdc (limit values)	
Ripple:	2 Vpp max.	
Current consumption (output current excluded):	30 mA max.	
Outputs:	N.O.; PNP or NPN (short circuit protection)	
Output current:	100 mA max.	
Output saturation voltage:	2 V max.	
Response time:	1 ms (4 ms mod.F00)	
Switching frequency:	500 Hz (120 Hz mod.F00)	
Indicators:	OUTPUT LED (YELLOW) mod.G00 excluded POWER ON LED (GREEN) (mod.G00)	
Setting:	sensitivity trimmer (mod.B01/C01)	
Operating temperature:	-25 … 55 °C	
Storage temperature:	-25 … 70 °C	
Insulating strength:	500 Vac 1 min., between electronics and housing	
Insulating resistance:	>20 MΩ 500 Vdc, between electronics and housing	
Operating distance (typical values):	A00: 0.1…3.5 m on R2 B01: 0.1…2.5 m on R2 C01: 1…40 cm C10: 0…10 cm / C20: 0.2…10 cm F00/G00: 0…18 m	A00: 0.1…2.5 m on R2 B01: 0.1…2.0 m on R2 C01: 1…30 cm C10: 0…8 cm F00/G00: 0…15 m
Emission type:	RED (660 nm) (mod.B01) / INFRARED (880 nm) (mod.A00/C01/C10/C20/G00)	
Ambient light rejection:	according EN 60947-5-2	
Vibrations:	0.5 mm amplitude, 10 … 55 Hz frequency, for every axis (EN60068-2-6)	
Shock resistance:	11 ms (30 G) 6 shock for every axis (EN60068-2-27)	
LIGHT/DARK selection:	white wire or pin 2 connected to +10…30V LIGHT mode; to 0V DARK mode white wire or pin 2 not connected LIGHT mode (mod.C01/C10/C20); DARK mode (mod.A00/B01/F00)	
Housing material:	Nickel-plated brass	
Lens material:	PMMA	
Mechanical protection:	IP67	
Connections:	2 m cable ∅ 4 mm / M12 - 4 pole connector	
Weight:	110 g. max. cable vers. / 60 g. max. connector vers.	

SETTING

Setting of S51-…A00/B01
Position the sensor and reflector on opposite sides.
Moving the sensor both vertically and horizontally, determine the power on and off points of the yellow LED (OUT) and then mount the sensor in the middle of the points defined.
B01 Model: Turn the sensitivity trimmer to the maximum position.
If necessary reduce sensitivity in order to detect very small targets. In order to improve alignment, repeat the procedure detailed above whilst progressively reducing the sensitivity.

Setting of S51-…F00/G00
Position the sensors on opposite sides.
Move the sensor both vertically and horizontally, determine the power on and off points of the yellow LED (OUT) and then mount the sensor in the middle of the defined points.

Setting of S51-…C01
Turn the sensitivity trimmer to minimum: the yellow LED is OFF.
Position the target to detect in front of the sensor.
Turn the sensitivity trimmer clockwise until the yellow LED turns ON *(Target detected state, pos.A)*.
Remove the target, the yellow LED turns OFF.
Turn the sensitivity trimmer clockwise until the yellow LED turns ON *(Background detected state, pos.B)*.
The trimmer reaches the maximum level if the background is not detected.
Turn the trimmer to the intermediate C position, between the two A and B positions.

Setting of S51-…C10/C20
The operating distance range of these sensors is factory preset: please consider this feature when positioning.

TEST FUNCTION (S51-…G00)

The TEST+ and TEST- inputs can be used to inhibit the emitter and verify that the system is correctly operating.
The receiver output should switch when the test is activated while the beam is uninterrupted. The inputs activating voltage range is 10 … 30 Vdc, whilst respecting the polarity.
The emission is switched off connecting TEST+ to Vdc and TEST- to 0V.

EX-II-3-D T6

Temperature class:	T6 (<85°C)
Max. Power consumption:	900 mW at 30 Vdc
Max. Internal capacitance:	170 nF
Internal inductance:	negligible

DECLARATION OF CONFORMITY
We DATASENSOR S.p.A. declare under our sole responsibility that these products are conform to the 2004/108/CE, 2006/95/CE Directives and successive amendments.

WARRANTY
DATASENSOR S.p.A. warrants its products to be free from defects.
DATASENSOR S.p.A. will repair or replace, free of charge, any product found to be defective during the warranty period of 36 months from the manufacturing date.
This warranty does not cover damage or liability deriving from the improper application of DATASENSOR products.

DATASENSOR S.p.A. Via Lavino 265
40050 Monte S. Pietro - Bologna - Italy
Tel: +39 051 6765611 Fax: +39 051 6759324
http://www.datasensor.com e-mail: info@datasensor.com

DATASENSOR S.p.A. cares for the environment: 100% recycled paper.
DATASENSOR S.p.A. reserves the right to make modifications and improvements without prior notification.

826001254 Rev.E

CTi Automation - Phone: 800.894.0412 - Fax: 208.368.0415 - Web: www.ctiautomation.net - Email: info@ctiautomation.net

S51-PA/PR SERIES

INSTRUCTION MANUAL

CONTROLS

OUTPUT LED (S51-…A00/B01/C01/C10/F00)
The yellow LED ON indicates that the NO output status is closed.

POWER ON LED (S51-…G00)
The green LED indicates that the sensor is operating.

TRIMMER (S51-…B01/C01)
The trimmer can be used to adjust sensitivity; the operating distance increases turning the trimmer clockwise.

WARNING: *The trimmer rotation is limited to 270°.*
Do not apply excessive torque beyond the maximum and minimum positions (max 40 Nmm).

INSTALLATION

The sensor can be fixed by means of the M18x1 threaded body through a ∅ 18mm hole, using the specific washer and the two CH.24 nuts (1.5Nm maximum tightening torque) or CH.22 nuts, h=8mm, (2Nm maximum tightening torque) enclosed. Alternatively, the sensor can be mounted through the two housing's holes using two screws (M3x22 or longer) and washer.
Amongst the various possible solutions, we suggest to choose the combination that offers the best visibility of the signalling LEDs and the easiest access to the trimmer.
Various orientable fixing brackets are available to ease the sensor positioning (please refer to the accessories listed in the general catalogue). The operating distance is measured from the front surface of the sensor lens.

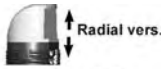

C models: To improve the detection, the object has to be moved closer or further away from the front surface of the sensor lens.
In case of lateral translation, the object must move as indicated in the figure.

CONNECTIONS

The connections are compliant to the EN 60947-5-2 standard.

S51-…A00/B01/C01/C10/F00

BROWN	1	+ 10 … 30 Vdc
WHITE	2	DARK- / LIGHT+ *
BLACK	4	N.O. OUTPUT
BLUE	3	– 0 V

S51-…G00

BROWN	1	+ 10 … 30 Vdc
WHITE	2	TEST +
BLACK	4	TEST -
BLUE	3	– 0 V

* in case of white wire or pin 2 not connected the sensor works in LIGHT mode for proximity models (C01/C10/C20) and in DARK mode for retroreflex (A00/B01) and receiver (F00).

M12 CONNECTOR

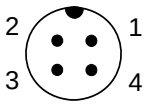

DIMENSIONS

AXIAL VERSION

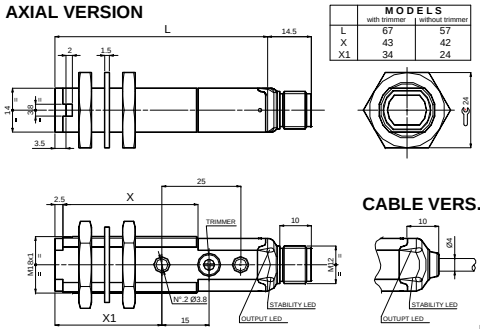

MODELS	with trimmer	without trimmer
L	67	57
X	43	42
X1	34	24

RADIAL VERSION

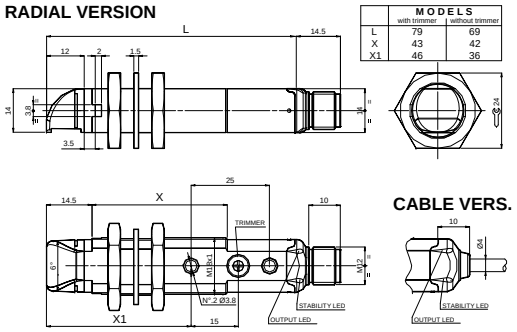

MODELS	with trimmer	without trimmer
L	79	69
X	43	42
X1	46	36

CH.24 PLASTIC NUTS

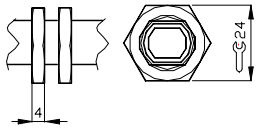

CH.22 PLASTIC NUTS

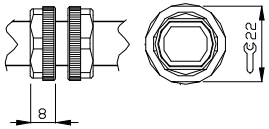

TECHNICAL DATA

	S51-PA AXIAL VERSION	S51-PR RADIAL VERSION
Power supply:	10 … 30 Vdc (limit values)	
Ripple:	2 Vpp max.	
Current consumption (output current excluded):	30 mA max.	
Outputs:	N.O.; PNP or NPN (short circuit protection)	
Output current:	100 mA max.	
Output saturation voltage:	2 V max.	
Response time:	1 ms (4 ms mod.F00)	
Switching frequency:	500 Hz (120 Hz mod.F00)	
Indicators:	OUTPUT LED (YELLOW) mod.G00 excluded POWER ON LED (GREEN) (mod.G00)	
Setting:	sensitivity trimmer (mod.B01/C01)	
Operating temperature:	-25 … 55 °C	
Storage temperature:	-25 … 70 °C	
Insulating strength:	500 Vac 1 min., between electronics and housing	
Insulating resistance:	>20 MΩ 500 Vdc, between electronics and housing	
Operating distance (typical values):	A00: 0.1…3.5 m on R2 B01: 0.1…2.5 m on R2 C01: 1…40 cm C10: 0…10 cm F00/G00: 0…18 m	A00: 0.1…2.5 m on R2 B01: 0.1…2.0 m on R2 C01: 1…30 cm C10: 0…8 cm F00/G00: 0…15 m
Emission type:	RED (660 nm) (mod.B01) / INFRARED (880 nm) (mod.A00/C01/C10/G00)	
Ambient light rejection:	according EN 60947-5-2	
Vibrations:	0.5 mm amplitude, 10 … 55 Hz frequency, for every axis (EN60068-2-6)	
Shock resistance:	11 ms (30 G) 6 shock for every axis (EN60068-2-27)	
LIGHT/DARK selection:	white wire or pin 2 connected to +10…30V LIGHT mode; to 0V DARK mode white wire or pin 2 not connected LIGHT mode (mod.C01/C10); DARK mode (mod.A00/B01/F00)	
Housing material:	PBT	
Lens material:	PMMA	
Mechanical protection:	IP67	
Connections:	2 m cable ∅ 4 mm / M12 - 4 pole connector	
Weight:	75 g. max. cable vers. / 25 g. max. connector vers.	

SETTING

Setting of S51-…A00/B01
Position the sensor and reflector on opposite sides.
Moving the sensor both vertically and horizontally, determine the power on and off points of the yellow LED (OUT) and then mount the sensor in the middle of the points defined.
B01 Model: Turn the sensitivity trimmer to the maximum position.
If necessary reduce sensitivity in order to detect very small targets. In order to improve alignment, repeat the procedure detailed above whilst progressively reducing the sensitivity.

Setting of S51-…F00/G00
Position the sensors on opposite sides.
Move the sensor both vertically and horizontally, determine the power on and off points of the yellow LED (OUT) and then mount the sensor in the middle of the defined points.

Setting of S51-…C01

Turn the sensitivity trimmer to minimum: the yellow LED is OFF.
Position the target to detect in front of the sensor.
Turn the sensitivity trimmer clockwise until the yellow LED turns ON *(Target detected state, pos.A)*.
Remove the target, the yellow LED turns OFF.
Turn the sensitivity trimmer clockwise until the yellow LED turns ON *(Background detected state, pos.B)*.
The trimmer reaches the maximum level if the background is not detected.
Turn the trimmer to the intermediate C position, between the two A and B positions.

Setting of S51-…C10
The operating distance range of these sensors is factory preset: please consider this feature when positioning.

TEST FUNCTION (S51-…G00)

The TEST+ and TEST- inputs can be used to inhibit the emitter and verify that the system is correctly operating.
The receiver output should switch when the test is activated while the beam is uninterrupted. The inputs activating voltage range is 10 … 30 Vdc, whilst respecting the polarity.
The emission is switched off connecting TEST+ to Vdc and TEST- to 0V.

EX-II-3-D T6

Temperature class:	T6 (<85°C)
Max. Power consumption:	900 mW at 30 Vdc
Max. Internal capacitance:	170 nF
Internal inductance:	negligible

DECLARATION OF CONFORMITY
We DATASENSOR S.p.A. declare under our sole responsibility that these products are conform to the 2004/108/CE, 2006/95/CE Directives and successive amendments.

WARRANTY
DATASENSOR S.p.A. warrants its products to be free from defects.
DATASENSOR S.p.A. will repair or replace, free of charge, any product found to be defective during the warranty period of 36 months from the manufacturing date.
This warranty does not cover damage or liability deriving from the improper application of DATASENSOR products.

DATASENSOR S.p.A. Via Lavino 265
40050 Monte S. Pietro - Bologna - Italy
Tel: +39 051 6765611 Fax: +39 051 6759324
http://www.datasensor.com e-mail: info@datasensor.com

DATASENSOR S.p.A. cares for the environment: 100% recycled paper.
DATASENSOR S.p.A. reserves the right to make modifications and improvements without prior notification.

826002970 Rev.A

CTi Automation - Phone: 800.894.0412 - Fax: 208.368.0415 - Web: www.ctiautomation.net - Email: info@ctiautomation.net